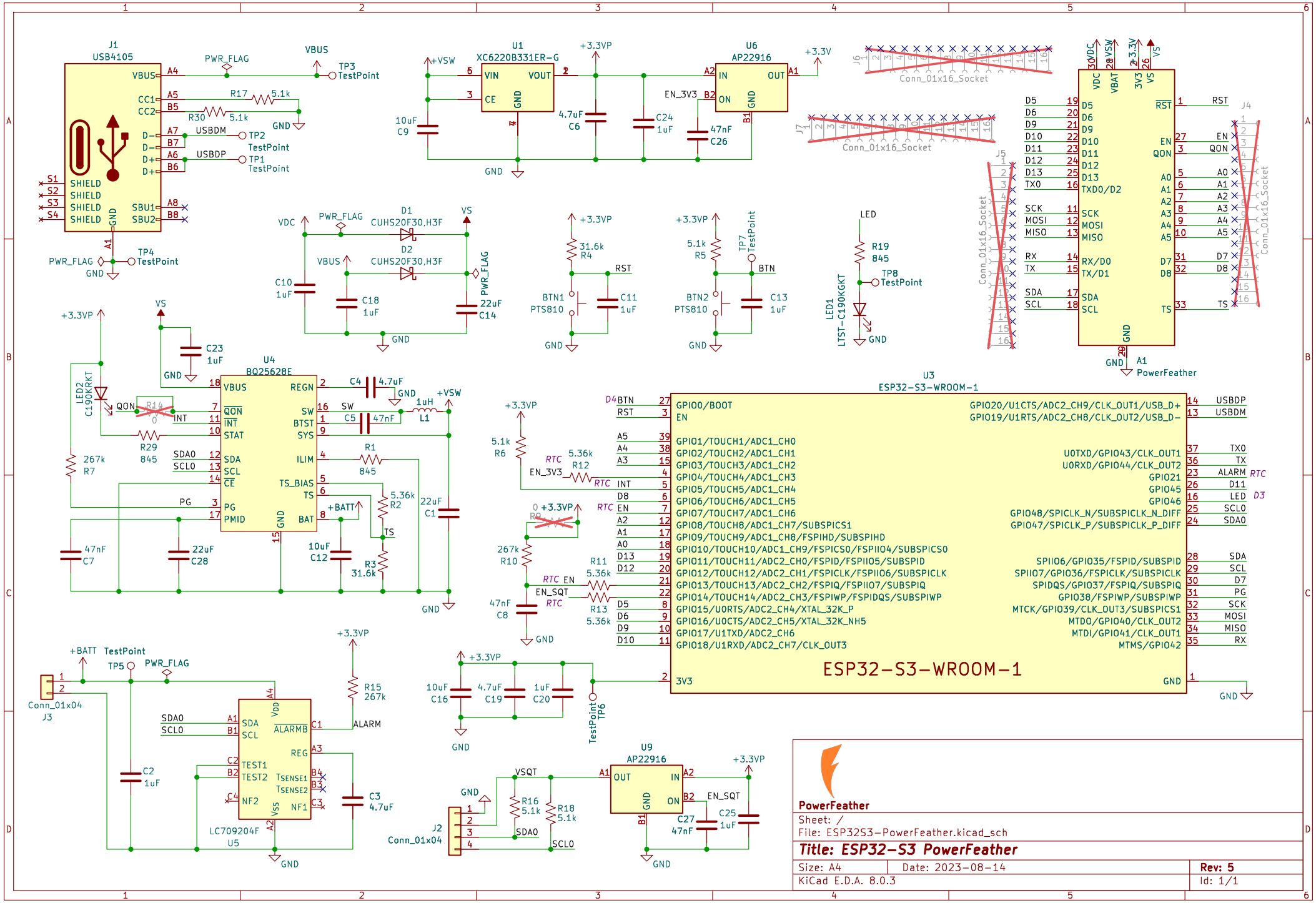
J1
USB4105
VBUS
CC1
CC2
D-
D-
D+
D+
SHIELD
SHIELD
SHIELD
SHIELD
GND
SBU1
SBU2
PWR_FLAG
TP3
TestPoint
R17
5.1k
R30
5.1k
USBDM
TP2
TestPoint
USBDP
TP1
TestPoint
TP4
TestPoint
U1
XC6220B331ER-G
VIN
VOUT
CE
GND
+VSW
10uF
C9
+3.3VP
4.7uF
C6
C24
1uF
U6
AP22916
IN
OUT
ON
GND
EN_3V3
47nF
C26
+3.3V
Conn_01x16_Socket
J6
J7
J5
J4
Conn_01x16_Socket
VDC
PWR_FLAG
D1
CUHS20F30,H3F
D2
CUHS20F30,H3F
VS
VBUS
C10
1uF
C18
1uF
22uF
C14
31.6k
R4
RST
BTN1
PTS810
C11
1uF
5.1k
R5
TP7
TestPoint
BTN
BTN2
PTS810
C13
1uF
LED
R19
845
TP8
TestPoint
LED1
LTST-C190KGKT
VDC
VBAT
3V3
VS
D5
D6
D9
D10
D11
D12
D13
TXD0/D2
TX0
SCK
MOSI
MISO
RX/D0
TX/D1
SDA
SCL
RST
EN
QON
A0
A1
A2
A3
A4
A5
D7
D8
TS
GND
PowerFeather
C23
1uF
LED2
C190KRKT
QON
R14
0
INT
STAT
R29
845
267k
R7
SDA0
SCL0
CE
PG
PMID
U4
BQ25628E
VBUS
REGN
SW
BTST
SYS
ILIM
TS_BIAS
TS
BAT
GND
C4
4.7uF
SW
C5
47nF
1uH
L1
R1
845
5.36k
R2
22uF
C1
+BATT
10uF
C12
R3
31.6k
47nF
C7
22uF
C28
U3
ESP32-S3-WROOM-1
GPIO0/BOOT
EN
GPIO1/TOUCH1/ADC1_CH0
GPIO2/TOUCH2/ADC1_CH1
GPIO3/TOUCH3/ADC1_CH2
GPIO4/TOUCH4/ADC1_CH3
GPIO5/TOUCH5/ADC1_CH4
GPIO6/TOUCH6/ADC1_CH5
GPIO7/TOUCH7/ADC1_CH6
GPIO8/TOUCH8/ADC1_CH7/SUBSPICS1
GPIO9/TOUCH9/ADC1_CH8/FSPIHD/SUBSPIHD
GPIO10/TOUCH10/ADC1_CH9/FSPICS0/FSPIIO4/SUBSPICS0
GPIO11/TOUCH11/ADC2_CH0/FSPID/FSPIIO5/SUBSPID
GPIO12/TOUCH12/ADC2_CH1/FSPICLK/FSPIIO6/SUBSPICLK
GPIO13/TOUCH13/ADC2_CH2/FSPIQ/FSPIIO7/SUBSPIQ
GPIO14/TOUCH14/ADC2_CH3/FSPIWP/FSPIDQS/SUBSPIWP
GPIO15/U0RTS/ADC2_CH4/XTAL_32K_P
GPIO16/U0CTS/ADC2_CH5/XTAL_32K_NH5
GPIO17/U1TXD/ADC2_CH6
GPIO18/U1RXD/ADC2_CH7/CLK_OUT3
3V3
GPIO20/U1CTS/ADC2_CH9/CLK_OUT1/USB_D+
GPIO19/U1RTS/ADC2_CH8/CLK_OUT2/USB_D-
U0TXD/GPIO43/CLK_OUT1
U0RXD/GPIO44/CLK_OUT2
GPIO21
GPIO45
GPIO46
GPIO48/SPICLK_N/SUBSPICLK_N_DIFF
GPIO47/SPICLK_P/SUBSPICLK_P_DIFF
SPIIO6/GPIO35/FSPID/SUBSPID
SPIIO7/GPIO36/FSPICLK/SUBSPICLK
SPIDQS/GPIO37/FSPIQ/SUBSPIQ
GPIO38/FSPIWP/SUBSPIWP
MTCK/GPIO39/CLK_OUT3/SUBSPICS1
MTDO/GPIO40/CLK_OUT2
MTDI/GPIO41/CLK_OUT1
MTMS/GPIO42
GND
USBDP
USBDM
TX0
TX
ALARM
D11
LED
SCL0
SDA0
SDA
SCL
D7
PG
SCK
MOSI
MISO
RX
RTC
D3
D4
5.1k
R6
5.36k
R12
267k
R10
R11
5.36k
R13
5.36k
47nF
C8
+BATT
TestPoint
TP5
PWR_FLAG
Conn_01x04
J3
SDA0
SCL0
SDA
SCL
ALARMB
REG
TEST1
TEST2
TSENSE1
TSENSE2
NF2
NF1
VDD
VSS
LC709204F
U5
C2
1uF
C3
4.7uF
R15
267k
ALARM
10uF
C16
4.7uF
C19
1uF
C20
TestPoint
TP6
J2
Conn_01x04
VSQT
R16
5.1k
R18
5.1k
SDA0
SCL0
U9
AP22916
OUT
IN
ON
GND
EN_SQT
C27
47nF
C25
1uF
PowerFeather
Sheet: /
File: ESP32S3-PowerFeather.kicad_sch
Title: ESP32-S3 PowerFeather
Size: A4
Date: 2023-08-14
Rev: 5
KiCad E.D.A. 8.0.3
Id: 1/1